# NG360

NORDIC TRANSDUCER

**Inclinometer with digital RS485 communications port and 360 degree measuring range**

## Features

- **integrated 16bit microprocessor**
- **RS485 bus output signal**
- **no measuring range limitation**
- **0.01 degree resolution**
- **minimal linearity deviation**
- **high long-term stability**
- **hysteresis free output signal**
- **minimal zero point drift**
- **no interference by ambient electromagnetic fields**
- **shockproof as without moving mechanical parts**
- **hermetically sealed**
- **sensor electrically isolated from point of measurement - no ground connection**
- **zero point adjustable through 360° using clamping ring**
- **integrated temperature measurements rectify any temperature related measuring inaccuracies**

## Description

The NG360 is a capacitive, liquid based inclinometer with integrated sensor electronics and 16 bit microprocessor. The measurement result is transmitted via a RS485 port for further processing. Up to 78 sensors can be operated using a single communications line.
The measurement method provides a linear relationship between the angle to be measured and the output signal. The determined angle is independent of the local gravitational acceleration, that means that no matter where the measurement is being taken, whether in Europe, Australia, on Mount Everest or on the moon, the inclination will be measured correctly anywhere. Temperature related inaccuracies are corrected by the integrated microprocessor.

## Application

The NG360 inclinometer is suitable for applications requiring the measurement of any angle for further processing on a PC.
Typical areas of application include construction, mining, vehicles, aircraft, ships, surveying equipment, and transportation and conveyor systems.

# NG360

NORDIC TRANSDUCER

## Technical Specifications

| | |
|---|---|
| Measuring range | 360 degrees |
| Resolution | 0.01 degrees |
| Dimensions | see dimension drawing |
| Linearity deviation | ±0.25 degrees |
| Transverse sensitivity | < ±0.1 degree at 45° tilt |
| Setling time | approx. 0.3 seconds |
| Supply voltage $U_{bN}$ | 9V ... 15V |
| Supply voltage on-transition time | < 50ms |
| Current drawn | Approx. 40mA |
| Operating temperature | -40 to +85°C |
| Weight | Approx 120 gram |
| Electrical connection | 1m shielded cable ø 4.6mm |

## NG360–Sensor with RS485- Bus

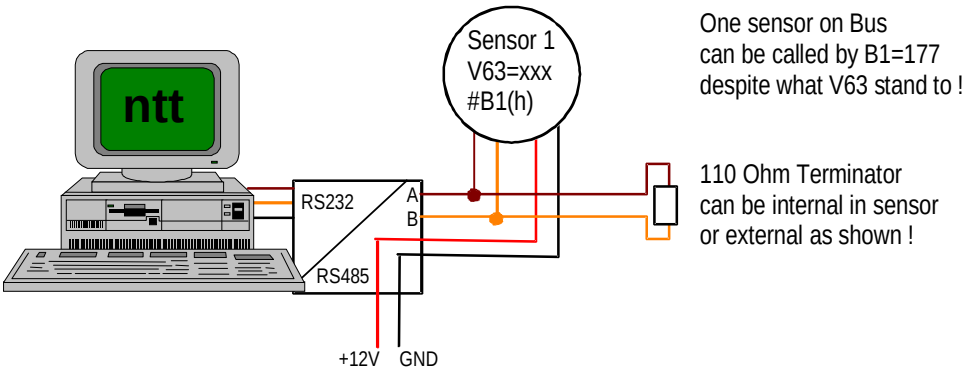


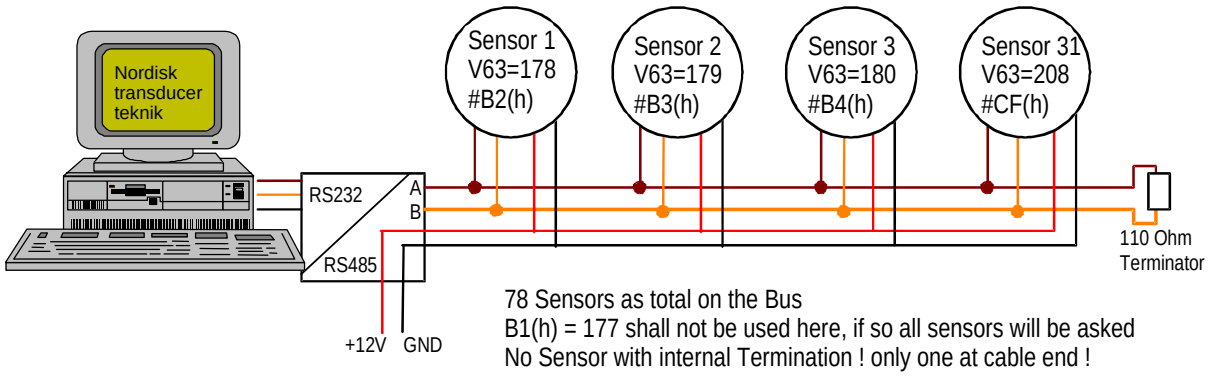

# NG360

NORDIC TRANSDUCER

## Connection to SEIKA RS232/RS485 converter SC485B ( Option )

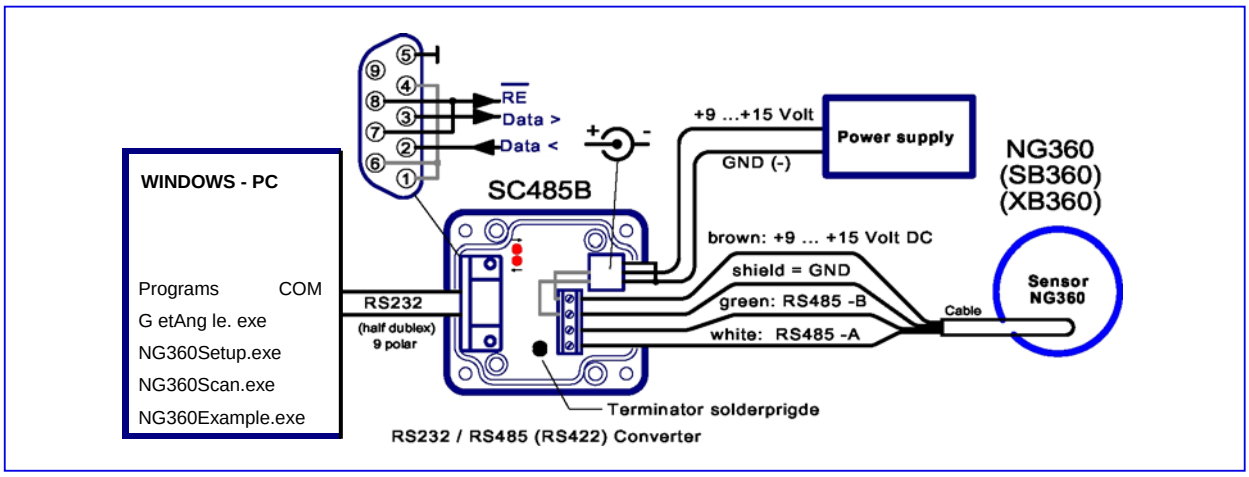


## Dimensions & Connections

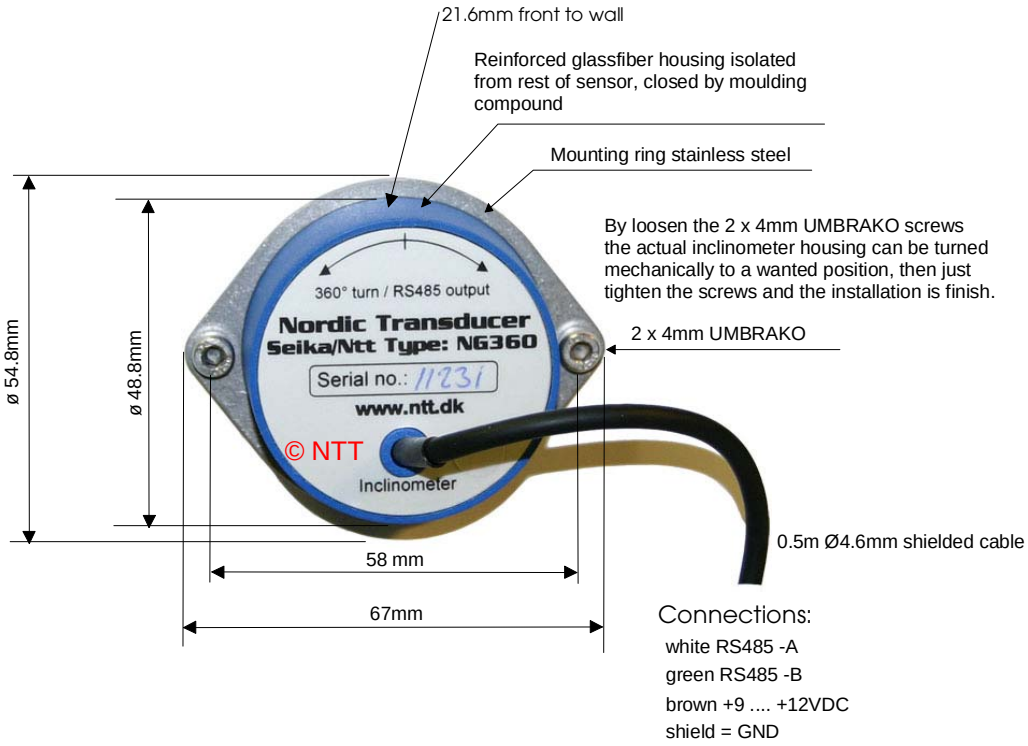

## Data transmission protocol of measured angle

| Step | PC transmits | Sensor transmits | |
|---|---|---|---|
| 1. | **Adress**<br>**(e.g.** B1 or B2 or B3...) | | |
| 2. | **ENQ** (05h) | | |
| 3. | 15ms pause (switching from receive to transmit in sensor) | | |
| 4. | | **STX** (02h)<br>e.g.: **359.99**<br>(angle in ASCII code)<br>**ETB** (17h) | |
| 5. | | **Checksum**<br>(2 Byte ASCII code)<br>**$** (24h) | The checksum is the XOR combination of the sensor output in step 4 (e.g. 02h XOR 359.99 XOR 17h) |
| 6. | 15ms pause (switching from transmit to receive in sensor) | | |
| 7. | **ACK** (06h)<br>if checksum is correct<br>**NAK** (15h)<br>if checksum is wrong | | |
| 8. | | If ACK, terminate<br>If NAK, return to 3. | |

## PC COM port settings for the RS232/RS485 converter

| | |
|---|---|
| Bit/Sec | 9600 |
| Data bit | 8 |
| Parity | none |
| Stop bit | 1 |
| Protocol | none |

## Software (WINDOWS 98, WINDOWS XP)

To display the measurement results and configure the sensor the following programs are used. These programs require a PC running Windows 95/98 or Windows XP.
Although the NG360 will operate from any half-duplex RS485 port, we recommend using the SEIKA interface converter SC485B.
NG360 programs should be copied to the hard disk before running them!
The programs can be downloaded at:
http://www.ntt.dk/ng360.htm

## GetAngle.exe

This program displays the angle of one or more NG360, which are connected through a RS232/RS485-Converter (i.e. SEIKA SC485B) to the PC. The serial port COM.., the sensor address and the display speed (averaging of several measurements) can be adjusted. Additionally, measurements can be saved to a log file in regular time-intervals, for further processing i.e. with MS Excel.

If more than one sensor is connected to the same bus, the address 177 (hB1) #00 (as in the figure to the right) must not be used!!!
Since they always respond to the base address 177 (hB1), all the sensors would then answer simultaneously, inevitably causing jamming on the data bus and preventing the transfer of useful information. Nevertheless, the address 177 (hB1) may be used if only one sensor is active.

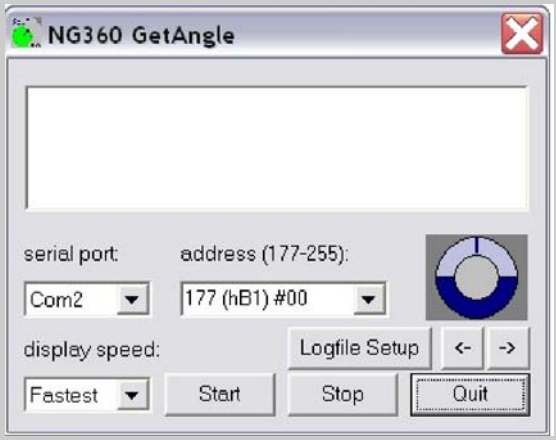


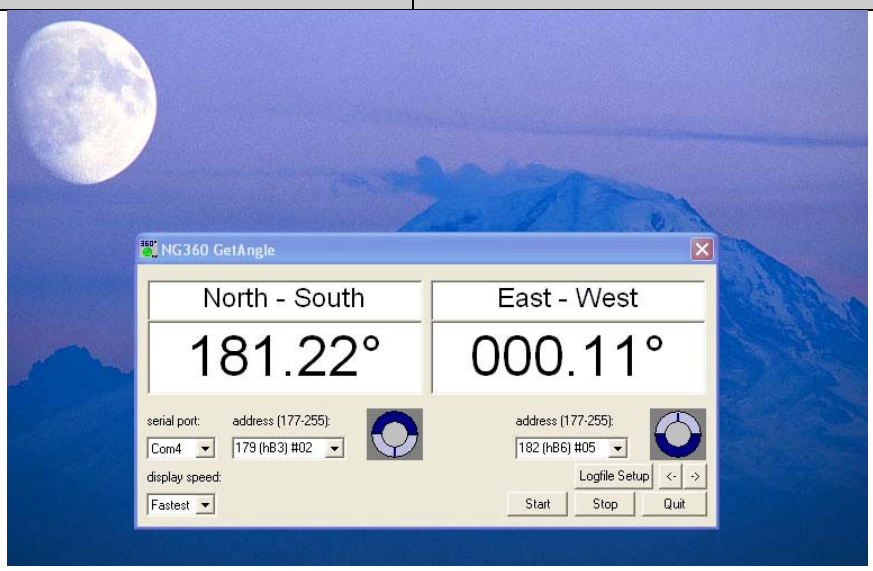


*NG360 Get angle program for several sensors with possibility for name as shown + log file on each sensor and filter setting.*

## NG360Setup.exe

This program can be used to change several parameters of the NG360. These parameters can be read, modified and then saved permanently in the NG360 EEPROM. This does not affect any calibration values.
Attention! If more then one NG360 are configured to use the same address, this inevitably leads to a bus conflict and may damage the bus-driver IC! Reprogramming of the addresses will then only be possible, if every but one sensor on the bus is switched off. Every sensor responds to the address 177 (hB1), and therefore no NG360 sensor should be programmed to use this address. Addressing a NG360 individually on a bus with multiple active NG360s is impossible after writing address 177 (hB1) to it. As all sensors always respond to the base address 177 (hB1), the transmitted data would be stored in all sensors, deleting any previous settings, in particular the individual addresses. The latter would then have to be reprogrammed.
If only one sensor is active, then the address 177 (hB1) can be used, necessary if the sensor's individual address isn't known or hasn't been assigned yet

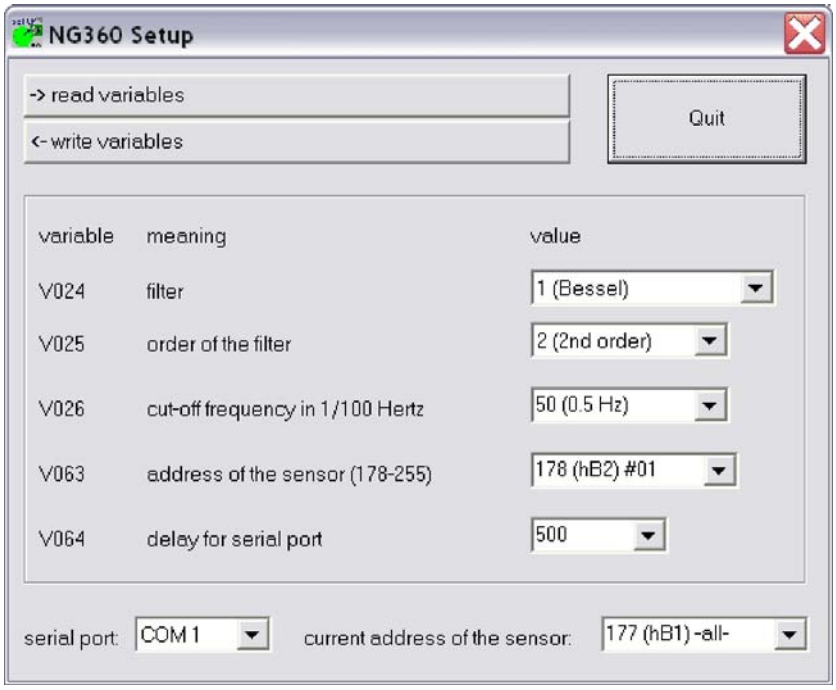


After that, invoking "read variables" returns the desired sensor's current configuration and displays the values in the corresponding boxes.
After selecting the values for the sensor variables V024, V025, V026 and V063 from their menus, clicking "write variables" permanently writes them to the addressed sensor's EEPROM.
The variable V064 (delay for serial port) determines the time period between the data bytes sent by the sensor. The standard setting is 500 and the value may be increased to ensure reliable data transfer for slow PC serial ports.
For applications requiring fast measurements, the signal filtering may be turned off by setting V025 (order of the filter) to 0 (no filter). However, these measurements tend to be more unstable. Slow measurements using a 2nd order filter with a low cut-off frequency (V026) display more stable measurement results.
Only one program (GetAngle.exe or NG360Setup.exe) may access the serial port at any one time, although more than one may be running simultaneously.
Any program using the above communication protocol will work with the NG360 sensors.

## NG360Scan.exe

You can use this program to identify every NG360 sensor connected to a serial PC COM port through a RS232/RS485-Converter. The program scans the whole range of possible NG360 addresses and displays the angle values send by each connected sensor.
Invoking "Scan" makes the program request a reading from each of the possible 78 addresses and wait for a response. Should a sensor respond, then the received angle measurement is displayed above the address.
After completing the scan, all active sensors can be determined by inspection.
Clicking the "Start reading" button causes the program to continually request and display the current angle for every active sensor connected to the bus until terminated by clicking "Stop reading".

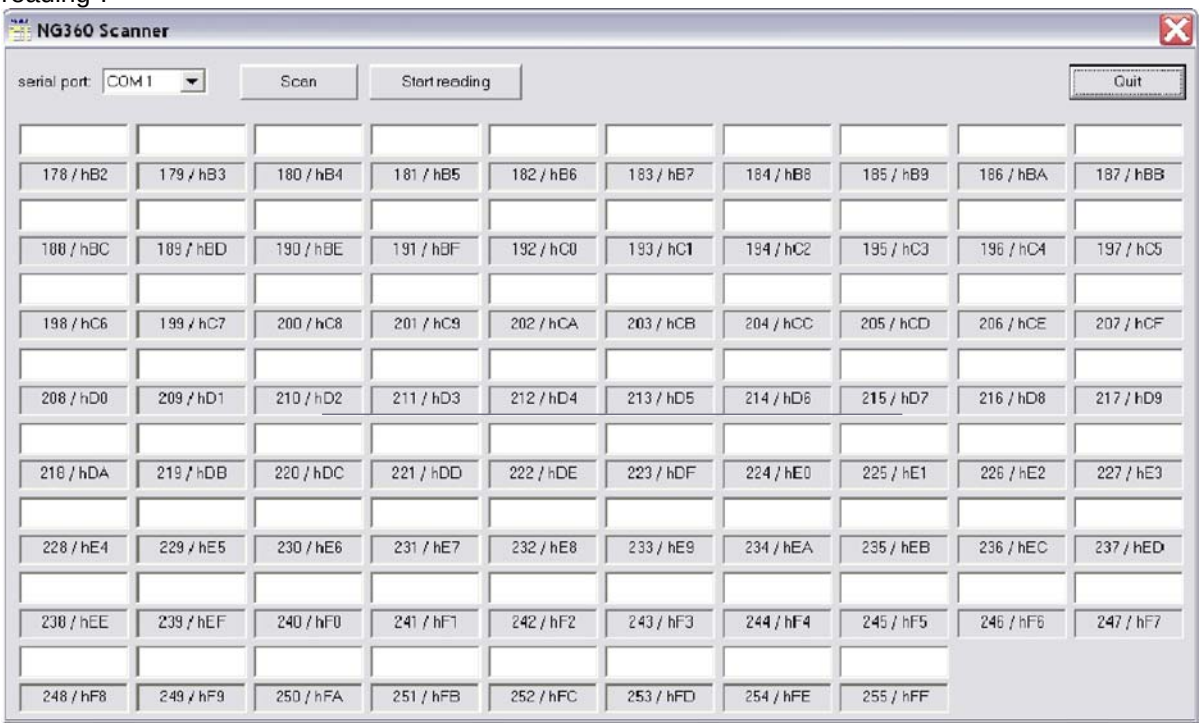


## NG360Example.exe

This directory contains an example program for programmers, with complete MS Visual C++ source-code. This open source example program developed using MS Visual C++ 5.0 provides some information how to develop interface software for the RS232/RS485 converter and the NG360 sensors.

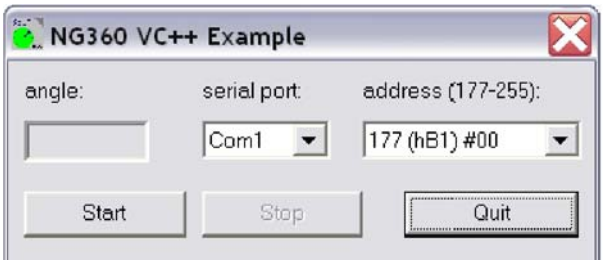

### Hardware-RESET

Upon activation of the supply voltage, the NG360 inclinometer is forced into a predefined operating state by a RESET. This procedure is important for a correct functionality of the internal microprocessor. The supply voltage rise time must be as short as possible for the RESET to be successful. A slow supply voltage rise time or switching the sensor on, off and on again in quick succession (bouncing) can cause the programs running on the internal microprocessor to crash, giving the impression of a defective sensor. Switching the supply voltage on correctly will start the sensor up again correctly. Similar problems can occur if the supply voltage falls below 9V or fluctuates around 9V. The operational time for a correct supply voltage is unlimited.